Physical ATM Security Threats in the U.S. and How to Prevent Them

An NCR ATM Security White Paper

Contents

Introduction	3
Understanding ATM Crime - Modus Operandi Evolution Cycle	4
Changing criminal landscapes	4
Safe Stratey	4
Certification of Safes	5
Location considerations	5
Physical Attack Vectors	6
Possible field upgrades	6
NCR Safe Slot Reinforements kits	6
Security Gates	6
ATM Anchoring Systems	6
ATM Gas Protection System	6
GPS devices and ATM Trackers	6
ATM Armour	6
Cash Degradation	6
Summary	6

Introduction

In recent months, there has been an increase in the frequency and variety of physical attacks on all ATMs in the United States.

These have included attacks where new methods have been employed to use vehicles to pull open the safe doors. Drive-up island ATMs have been particularly vulnerable to these types of attacks.

The US is now also experiencing a surge in explosive attacks. These attacks have been common in other regions. As with most crimes this too has expanded into new markets. The US ATM customer now needs to take this attack into consideration and plan their defences accordingly.

This NCR secure whitepaper is designed to provide you with an overview of the attacks and outline a range of security options that are available to help reduce your risk.

Please Note:

This whitepaper includes data that shall not be disclosed outside of your organisation and shall not be duplicated, used, or disclosed in whole, or in part, for any purpose.

The material in this proposal relating to NCR equipment, programs, products and services is to be treated as confidential and a trade secret of NCR and is not to be used or disclosed except to your employees on a need to know basis.

Every effort has been made to identify trademark information in the accompanying text. However, this information may unintentionally have been omitted in referencing particular products. Product names that are not noted may also be registered trademarks or trademarks of their respective holders.

Copyright © 2020 by NCR. All Rights Reserved. Confidential, Unpublished Property of NCR.

Understanding ATM Crime - Modus Operandi Evolution Cycle

Criminals always seek new opportunities and continue to commit crimes until they see that their efforts are unsuccessful.

From there, they move on and try something new. It is therefore a neverending cycle. It is important to understand this mindset in order to understand how crimes evolve. Trying to plan and understand the next step a criminal will take is something that can prove difficult, but understanding the Modus Operandi cycle and following trends in other markets can help financial institutions understand how crimes evolve.

There are four stages in the attack/countermeasure cycle (as seen in the diagram above). Each stage is not of equal measure and some stages can last longer than others. For example, developing countermeasures can take time due to additional pressures placed on the industry, such as resources, budgets, etc. During the first phase (attack), criminals have found an opportunity and are attacking units using a new type of vector. As there are many test vehicles available to criminals, this new attack vector will see many iterations until the modus operandi (MO) is optimised by the criminals (second phase). As we move into the third phase, manufacturers/banks develop protection and countermeasures to protect and prevent attacks from occurring. When these are released, there is typically a deployment of countermeasures sent into the field (fourth phase). Time, budgets, and resources usually mean that the third and fourth phases can take considerably more time. Once the countermeasure is deployed and becomes effective, criminals need to develop news ways to compromise the ATM, consequently the cycle begins again as new MO arises. For example, in Europe criminals moved from on-site tool attacks to ram-raid/pull-out attacks, to gas explosives, to solid explosives—new countermeasures for each had to be developed and deployed over a 10-year period. Due to evolving MOs, many European countries now mandate higher security safes (CEN 3 or 4) as standard and other countermeasures, such as note degradation systems. As a result of the changing landscape, NCR has made the strategic decision to move forward with the CEN 3 GasEx as an offering in all of our ATMs.

Changing criminal landscapes

According to the European Association for Secure Transaction (EAST) that tracks ATM attacks, there were 4,571 reported physical attacks on ATMS from all vendors in 2019—these include ram-raids, pull-outs, gas and solid explosive attacks. This equates to 13.7 attacks per 1,000 ATMs over the period.

While the majority of attacks continue to be explosive gas attacks, 321 solid explosive attacks were reported in 2019 by 10 countries, five of them being major ATM deployers. Explosive gas attacks were reported by 12 countries, five of them were also major ATM deployers.

NCR cannot say how many of these attacks were targeted on NCR units, the grading of these units, and whether they had additional GasEx resistance as this information is often not shared and goes unpublished. What we do know is that certain countries in Europe such as Spain, the Netherlands and Germany, all mandate higher security GasExplosive safes as standard in their markets.

We understand from data produced from Brazil, that they had 1,027 physical attacks across their ATM estates in 2018—11 of which were solid explosive attacks. The numbers that Brazil is sharing are considerably lower than previous years where they were experiencing up to 240 solid attacks per year (circa 2011) and over 35,00 physical attacks per year (circa 2013). The countermeasures implemented, such as ink staining systems, by banks in this region have helped to bring the overall number of attacks down year over year. Some of these countermeasures will be explored later in this whitepaper.

We are starting to see a growing trend in physical attacks in the US. Reports have seen several explosive attacks in the first month of 2020 both in Florida and Washington. These attacks are occurring on ATMs from all ATM manufacturers. A new take on the 'pull-out' attack, which began late in Q3 2018 targeting drive-up ATMs, has caused a stir in the industry as criminals started using brute force to pull safe doors open using hooks and chains. The attacks average only 5-6 minutes on-site with losses exceeding $120k per unit. It has been reported that there have been 670 attacks industry-wide using this MO, although not all have been successful in accessing the cash. The attacks are seen predominantly in Texas, but are spreading to Louisiana, Florida and Georgia—overall 257 of the attacks so far have been outside of Texas. After releasing countermeasures for our CEN 1 drive-up range, the next step was to release higher security CEN 3 Gasex safes for stand-alone drive-up ATMs—not only to address the continuing threat of 'hook and chain' attacks, but also to protect against the growing threat of explosive attacks.

Safe Stratey

The strategy of safes has continued to evolve over the years as NCR looks to design security at the forefront of our product families. The first significant change was the move from UL to CEN safes. UL safes are made of steel construction as per the UL specification and guidelines but, in comparison, the CEN safes are of composite construction which offers greater resistance to tool attacks.

The higher the CEN grade, the greater resistance to tool attacks such as grinders, acetylene torches, drills etc. due to the added reinforcement within the safe body and doors. The gas explosive protection is offered on the higher security CEN 3 and CEN 4 graded safes. Cross sections of the safes are shown below for a comparison. The lowest grade of safe offered is CEN 1, however it was decided that CEN 3 (with gas explosive protection) should be the lowest level offered to standalone drive-up island units due to the traditional location of these deployments.

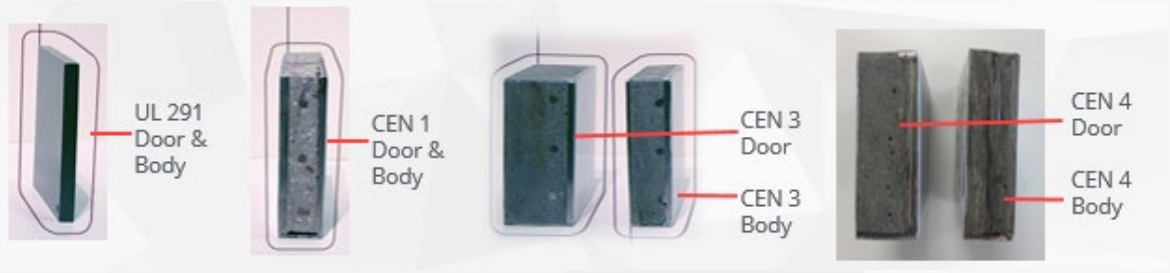

NCR has shipped over 30,000 CEN 3 GasEx and CEN 4 GasEx safes since 2014. Most of these deployments have been in Latin America, Europe and Australia. It has been observed that explosive attacks often migrate into neighbouring countries of the countires currently experiencing them, mainly due to geographic expansion of organised crime groups and the opportunistic ease of obtaining explosives.

The GasEx safes were designed for the higher security models of safe (CEN 3 and CEN 4) with the following features:

- Same physical space model—service footprint is maintained
- Improved boltwork—fixed bolts on hinge side to resist the explosion (on standard safes, the door was ejected after hinge side was breached)
- Improved barrier materials
- Better weld surface on locks chambers and on safe wall/door
- Additional internal materials

Certification of Safes

NCR and safe supplier have selected European Certification Body (ECB-S) certification for our safes as this is an internationally recognised accreditation and they are a leading certification body in safe certification.

They offer certification of three recognised European standards: EN 14450 (for S1 and S2 lower security grading for secure safe cabinets, for example); EN 1143-1 (for grades 0-VI for safes, strongrooms, ATMs) and EN 1143-2 for desposit systems (grading D-0 to N-IV). Safe locks are also tested by ECB-S to European Standard EN 1300. ECB-S has been affiliated with renowned European test houses and all must adhere to audits, standardised testing and procedures.

The ECB-S board is composed of a balanced representation of experts from insurers, users and manufacturers of the security industry (security technology, protection against fire and burglary), as well as the management of European Certification Body. The objective is to monitor the neutrality of the certification body, monitor the product certifications, and to ensure external quality surveillance audits are followed.

Location considerations

When planning and installing new ATMs, it is important to consider the location, general security and risk surrounding the site. Not only are financial institutions required to consider local mandates in place (for example, if deploying in Spain the unit must have a CEN 4 GasEx safe as standard), they should risk assess every location and site.

For example, ATMs located in branches may be less vulnerable to certain attack vectors as they benefit from the security of the bank branch itself and the ATM is unavailable once the branch is closed. However, an off-premise standalone dispenser located in a gas station forecourt, may be viewed at more risk because it's in an unattended environment. These assessments can help determine which level of safe should be ordered for the site (either CEN 1, CEN 3 or CEN 4—with or without gas explosive resistance). CEN 1 safes should be considered for units that are interior and benefit from the surrounding security, whereas exterior units, in standalone environments, should consider CEN 3 or higher. If the risk of explosive attacks is high, then the GasEx version should also be ordered for these units.

Stand-alone drive-up ATMs can also have a high-risk assessment depending on where they are situated. It was found that during "hook and chain" assaults on stand-alone drive-up ATMs, those ATMs at the end of the drive-up lane, especially where there was sufficient "runway" at the end, were more prone to this type of attack. The recommendation in this situation is to remove the "runway" if possible so vehicles are unable to drive off at high speed. Some examples of removing the "runway" were the introduction of chicanes in the drive-thru lanes or the addition of a bend after the last ATM. When the runway cannot be removed, some customers have introduced street furniture such as gates and anti-ram raid bollards to deter criminals from attacking their units.

It is recommended that all location sites should be risk assessed regardless if they are in branch or off-premise.

Physical Attack Vectors

The risk assessments that should be considered when deploying ATMs include an assessment of the type of physical attacks that these ATMs may fall victim to. Understanding the various attack vectors is critical, therefore we will explain these in detail.

Risk Level	Placement	Key Risks			
		Hook & Chain	Explosive	Ram Raid	Burglary
Level 1	In-Branch	OUT OF HOURS BREAK-IN			
Level 2	Through the Wall				
level 3	Semi-Controlled Vestibule/Lobby				
Level 4	Off-Premise				

Hook & Chain attack

This type of crime is unique to the US market where there is an abundance of standalone drive-up island ATMs. A hook and chain attack involves criminals using heavy-duty vehicles to attach a hook and chain to the ATM and driving off at high speed in an attempt to pull the door off and gain access to the cash.

A successful attack will see the door to the safe being ripped off and the cash cassettes being exposed. An unsuccessful attack can still result in significant damage to the ATM as sometimes the pull force can topple the ATM onto its front end.

Speed is essential to this attack as criminals must attach the hook or chain, pull off the door, collect cassettes/cash and leave the crime scene before local law enforcement arrive. Units at the end of a drive-up lane are viewed to be more susceptible as they offer more “runway” for the vehicles to gain more speed to drive away. Remote ATMs may be at more risk (where police may take longer to arrive), however ATMs in busy areas have also been targets.

Preventation of hook and chain attacks depends on whether the unit is already installed or is a new unit. Details of each countermeasure can be found in the next section of this whitepaper, but for the moment we will explore which preventative measures are recommended for each attack vector.

For units already deployed, these will likely feature CEN 1 level safes, therefore NCR’s recommendation is to deploy the NCR Safe Slot Reinforcement kits to remove the available space for hooks to be inserted into the safe apperture. As these are not visible from the outside of the ATM, it is recommended that stickers shipped with these kits should be included to warn that these units are protected.

Also depending on location (such as those units at the end of a drive-up lane or those in a remote location) should consider additional physical barriers for their ATMS to provide a highly visible defense and make the ATM less accessible, such as security gates. Security gates span the width of the unit and offer a strong physical barrier in front of the ATM.

Alternatively, ink staining solutions can be deployed. The system is designed to degrade banknotes permanently, staining them with ink to render the notes unusable if the ATM is attacked. Once criminals realize that the notes retrieved from this attack vector/or a particular bank are worthless, they will move onto another target.

For new units to be deployed, the standard level of a safe will now be CEN 3 GasEx for standalone island drive-up units with Safe Slot Reinforcements. This provides a significantly higher barrier to unauthorized safe entry, however in some cases it is recommended to also consider security gates or ink staining systems for high-risk sites.

Explosive attack

Explosive attacks come in two forms—gas explosives and solid explosives, with the latter proving to be the most destructive.

Gas attacks occur when criminals pump explosive gas mixtures into the ATM safe via the aperture and ignite it to cause an explosion in the hope that the safe door will be compromisedgain access to the safe.

Solid explosives are similar in MO but usually exert more energy and cause substantial damage to the ATM and the surrounding area, resulting in more collateral damage.

Gas explosions are more common than solid explosives as gas is more readily available to the public.

External units or those with external fascias such as TTW are most at risk of explosive attacks, particularly if they are in unattended or remote locations.

Like hook and chain attacks, the prevention is dependent on the vintage of the ATM. If it is a new ATM, it is recommended that a minimum of CEN 3 GasEx safe is deployed, which prevents the safe from becoming effectively a “bomb” and preventing collateral damage by containing the explosion and not breaching the safe door.

Ink staining systems are recommended also to act as a deterrant against these types of crimes, for both current installations of CEN 1 and CEN 3 GasEx safe units.

Gas protection systems can be used to expel any gas that is detected in an ATM to stop enough combustible energy from building up to cause an explosion. These can be retrofitted to any safe level or unit type.

Ram-raid/pull-out attacks

Ram-raid or pull-out attacks happen when construction or heavy-duty vehicles are used to remove the entire ATM from its mounting with the intent to compromise the safe later at a different location. Typically the smaller footprint ATMs have been subject to this type of crime, but we have seen some of the larger multifunction ATMs being targeted.

Typically external standalone units are the most vulnerable, but local news accounts have seen criminals smash and grab units that are situated in retails stores with quite devastating consequences for the store owner in terms of collateral damage.

Bank note staining systems have been the weapon of choice in Europe for these types of attacks as seismic detectors within the system can trigger an activiation of ink.

Trackers have also been used to help find stolen units and apprehend criminals by using GPS systems to follow the route of the stolen item.

All of the above countermeasures can be retrofitted into all units and safe types.

Anchoring systems and security gates are also a recommended countermeasure to help defend against ram raid attacks as these keep the unit anchored to the ground and prevent it from being removed from its mountings. Anchoring systems are ideally deployed at the point of installation, but the security gate can be retrofitted.

ATM burglary

ATM burglary is defined as the compromise of an ATM onsite with the intent to steal the cash inside. These in-situ attacks take many forms, some criminal use hand tools such as crow bars and angle grinders while other criminals will use acetylene torches to cut into the safe. External units are viewed as more vulnerable to these types of attacks, but often interior units not protected by a holistic security system (such as those security systems found in bank branches) are found to be target of these types of attacks as the criminals are in an enclosed space, away from the public eye and will not be disturbed.

Higher security safes (CEN 3 and CEN 4) are designed to protect against in-situ tool attacks as this type of attack vector forms part of the certification and classification of the ECB-S safe certification.

Other defences such as ink staining systems and ATM armour can also deter against these types of attacks, as the ATM armour acts as a visual and physical defence and ink will activate with certain movements within the unit. Both can be retrofitted to existing and new units.

Possible field upgrades

While installing new ATMs is the optimal defense, NCR recognizes that this is neither a practical or feasible scenario for all customers.

Where a safe upgrade is not possible in an existing ATM, there are several defences available from NCR and third-party providers that that should be considered to enhance the protection of currenly deployed ATMs.

These solutions include:

- Safe Slot Reinforcement kits
- Security gates
- Gas detection/neutralisation solutions that can be installed to detect the presence of gas used as part of an explosive attack. These devices can be configured to trigger alarms, smoke, sirens, or other notifications. Gas neutralization will counteract the presence of an explosive gas to prevent an explosion from occurring
- GPS devices and ATM trackers can be installed to both notify when motion is detected on an ATM and track the location of the ATM
- ATM armour
- Cash degradation solutions such as ink staining, that will make the cash unusable if the ATM cassette is breached

Now we can look at these in more detail.

NCR Safe Slot Reinforcement kits

With the emergence of "hook and chain" attacks in 2018, NCR looked to design a countermeasure that could be easily upgraded to our existing stand-alone drive-up ATMs. NCR's release of Safe Slot Reinforcement kits effectively removes all available space surrounding the dispenser/deposit aperture and reinforces the area around them. This reinforcement makes it more difficult to damage the module transports and subsequently insert a hook through the aperture in the safe door.

Each aperture requires a Safe Slot Reinforcement kit and have been uniquely designed for best fit around each module. Two are required for each ATM.

The SSR were made mandatory features with all stand-alone drive-up ATMs (6688) ordered after June 2019. Upgrade kits are available for those units already deployed in the field and details are available on request.

Stickers are also included in the kits to be placed on units upgraded with SSR, as the SSR are not visible once the fascia and beauty door are closed. The stickers act as a visual detterent for criminals so they are aware that they are upgraded.

Designed to prevent against hook and chain attacks

Security Gates

Security gates offer a visual detterant against physical attacks as they have a barrier across the width of NCR's standalone drive-up ATMs (6638 and 6688).

NCR has partnered with Companion Systems to release enhanced version of the ATM security gate which has been designed and tested to withstand pull force of up to 35,000 lbs. It has also been tested against cutting and blow torch attacks.

The strengthened barrier offers a convert locking system to make unauthorised access problematic. The lock itself contains concealed parts and blocker plates to eliminate any visible point of vulnerability to prevent saw and torch attacks. The gate features 16 anchoring points to secure to the ground and alarm sensors are available as an option.

Designed to prevent against **hook and chain** attacks, **ram-raid/pull-out** attacks.

ATM Anchoring Systems

While all site preparation guidelines must be followed when installing an ATM, third-party anchoring systems can be used for units which may be at risk of ram-raid or pull out attacks. Anti-ram raid plinths have various designs (from corcentina-effect to absorb shock loads so the unit can be pulled but not removed from its mounting to others that include chains secured to the base of the plinths). All have been tested against heavy plant machinery, large 4x4 vehicles, car transporters etc.

There are other retrofittable designs that can double up as physical and visual deterrents, too. Solutions have been designed for our multifunction products as well as the single function units.

Designed to prevent against **ram-raid/pull-out** attacks.

ATM Anchoring Systems

The use of gas explosives is a trend that is increasing in North America. Gas is easier to obtain than solid explosives—butane or oxy-acelyene are commonly used gasses.

There are numerous providers of gas protection systems that are relatively similar in their design and installation. These are designed to protect against the threat of gas explosives.

Gas protection key features

- Can detect any combustible gas via gas sensors
- Combustible gas can be detected in a matter of seconds
- Uses CO2 to purge any gas that has been pumped in the ATM
- Use of ignition to burn off any existing gas after the initial purge
- Can be connected to existing alarms
- Non-invasive installation

Designed to prevent against **gas explosive** attacks.

GPS devices and ATM Trackers

ATM trackers that utilise GPS technology can be installed into ATMs to allow tracking and recovery of either the cassette or the ATM itself, should they be stolen during an attack.

The devices that are in use are small and of a covert design. They are a fully automatic solution which silently and immediately notifies local law enforcement of the pull-out crime as it occurs. They feature internal and external GSM and GPS antennas and automatically detect tilt and/or motion. Tracking locations are usually updated every few seconds and offer access to a secure website for live tracking. Text and email alerts are sent if an ATM is attacked. They work on the principle that if a unit/cassette is stolen and traced, these units will become known in the criminal community as trackable. The success rates of retrievel of goods and apprehension of criminals as a result are very high according to vendor websites.

There are many companies which offer a variety of products that can track objects. Most will require an initial hardware upgrade and installation fee then an annual fee for access to their tracking services and tools. Most will tie in with local law enforcement agencies and offer 24/7/365 tracking capabilities.

Designed to prevent against **ram-raid/pull-out** attacks.

ATM Armour

ATM body armour upgrades UL safes to CEN V level protection and above to help against in-situ tool attacks. It provides both physical and visual protection and the armour packs are available for the ATM safe door, safe sides and safe front to provide individual protection for all areas that are commonly attacked.

This type of product will only offer protection against cutting or tool attacks. It does not offer defence against explosive attacks.

The ATM body armour has been tested independently to BS EN1143-1: 2005 + A1: 2009 and exceeds the Cen V level of safe protection.

Key Features

- Independently tested and certified to BS EN 1143-1 standards
- Exceeds Cen V Rating
- Compatible with all ATMs
- Rapidly installed/easy retrofitWith or without apertures
- Visual and physical deterrent
- Heavy duty construction
- Can be supplied globally
- Patent number GB2478534

Cash Degradtion

Ink staining systems are becoming more common in global deployments as a deterrant to physcial attacks on ATMs.

Whether they are being deployed due to government mandates, central bank legisalation or through customer preference, note degradation systems are growing in popularity.

There are many different vendors who offer ink staining systems for NCR ATMs, however NCR's preferred industry partner is Oberthur Cash Protection, who has had a long-lasting relationship with NCR and support systems for NCR customers in over 11 countries.

Ink staining systems have the ability to mark banknotes through intelligent sensing systems that detect criminal activity (e.g. explosive/gas attacks/ram raids/forced doors/physical attacks). Ink staining also neutralises the value of the notes. Many of the systems employed are designed to meet the mandatory requirements for homologated countries such as France and enforced legistation as seen in countries such as Malaysia.

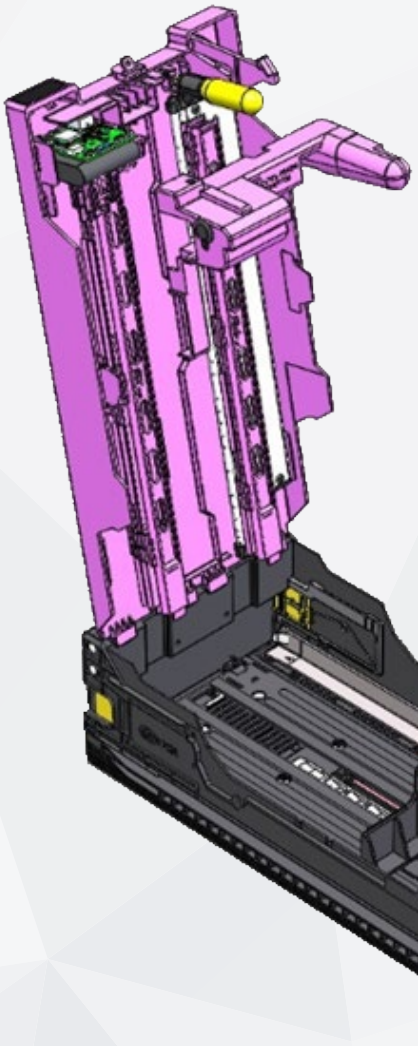

As a result, they offer a guaranteed 20% coverage on 100% of the notes. They are deployed globally, tried and tested on all types of currencies and substrates, including polymer and contain ink DNA to help trace notes back to the crime scene. Depending on the requirements, we can offer in-lid solutions or end-to-end sidewalk protection. The Oberthur solution includes a cassette locker to prevent false activiations from cash in transit teams. Oberthur offer solutions for S1, S2, BRM and GBxx recycling solutions. The systems are designed for each module so they will fit within all products that NCR sells today.

The objective of the solution is to 'destroy the prize' and therefore negate the crime.

Summary

In summary, we can never expect criminals to leave ATMs alone. Criminals will contine to modify their attacks and will continue to attempt new attacks in one market and expand them to other markets. Also, physical attacks are on the rise.

The only real defense is to stay proactive in the approach to securing the ATM. No one solution fits all types of attacks, so layering up, slowing down the attack and working with local law enforcement is key to success.

NCR has been proactive in continuing to expand our portfolio of security products and solutions. Our teams are at the ready to help you assess the security needs for your company.

In summary, here is a protection matrix derived from the content of this Whitepaper.

Defence Solution Protects Against	Attack Vector			
	Hook & Chain	Explosive	Ram Raid	Burglary
High Security Safes	Yes	Yes	Yes	Yes
Safe Slot Reinforcement	Yes			
Security Gate	Yes		Yes	
Anchoring			Yes	
Gas Protection		Yes (Gas Only)		
GPS			Yes	
Armour				Yes
Cash Degradation	Yes	Yes	Yes	Yes

Contact us at NCR.com today

About NCR

NCR Corporation (NYSE: NCR) is a leading software and services-led enterprise provider in the financial, retail, hospitality, small business and telecom and technology industries. We run key aspects of our clients' business so they can focus on what they do best. NCR is headquartered in Atlanta, GA with 34,000 employees and solutions in 141 countries. NCR is a trademark of NCR Corporation in the United States and other countries.

NCR continually improves products as new technologies and components become available. NCR, therefore, reserves the right to change specifications without prior notice.

All features, functions and operations described herein may not be marketed by NCR in all parts of the world. Consult your NCR representative or NCR office for the latest information.

All brand and product names appearing in this document are trademarks, registered trademarks or service marks of their respective holders.

© 2020 NCR Corporation Patents Pending 061220_PM-BAN_0620 ncr.com